Engine Transverse Support Bar

Operating Instructions & Parts Manual

Model	Capacity
BH2700	700 lbs

This is the safety alert symbol. It is used to alert you to potential personal injury hazards. Obey all safety messages that follow this symbol to avoid possible injury or death.

⚠ ADVERTENCIA

- Leer, comprender, y seguir las instrucciónes antes de utilizar el aparato.
- El manual de instrucciónes y la información de seguridad deben estar comunicado en lengua del operador antes del uso.
- No seguir estas indicaciónes puede causar daños personales o materiales.

⚠ **WARNING:** Cancer and Reproductive Harm.
⚠ **AVERTISSEMENT:** Cancer et dommages au système reproducteur.
⚠ **ADVERTENCIA:** Cáncer y daño reproductivo.
www.P65Warnings.ca.gov

SFA Companies
10939 N. Pomona Ave. Kansas City, MO 64153
sales@blackhawk-automotive.com

Read this manual and follow all the Safety Rules and Operating Instructions before using this product.

Printed in China
BH2700-M0_082018

SAFETY and GENERAL INFORMATION

Save these instructions. For your safety, *read, understand and follow* the information contained within. The owner and operator shall have an understanding of this product and safe operating procedures before attempting to use this product. Instructions and Safety information shall be conveyed in the operator's native language before use of this product is authorized. Make certain that the operator thoroughly understands the inherent dangers associated with the use and misuse of the product. If any doubt exists as to the safe and proper use of this product as outlined in this factory authorized manual, remove from service.

Inspect before each use. Do not use if there are broken, bent, cracked or otherwise damaged parts (including labels). Owners and operators of this equipment shall be aware that the use of this equipment may require special training and knowledge. It is recommended that an annual inspection be done by qualified personnel and that any missing or damaged decals, warning / safety labels or signs be replaced with factory authorized replacements only. Any engine transverse bar that appears to be damaged in any way, is worn or operates abnormally shall be removed from service immediately.

PRODUCT DESCRIPTION

This Engine Transverse Support Bar is designed to safely support an engine (up to 700 lbs.) within the confines of an automotive or light truck engine compartment. It aids the removal of motor mounts, timing belts, front wheel drive transaxles, and other engine compartment components on front and rear wheel drive automobiles.

BEFORE USE

1. Verify that the product and the application are compatible, if in doubt call Blackhawk Technical Service (888) 332-6419.
2. Before using this product, read the operator's manual completely and familiarize yourself thoroughly with the product, its components and recognize the potential hazards associated with its use.
3. Inspect before each use. Do not use if bent, broken or cracked components are noted.
4. Ensure that all parts move freely.

SPECIFICATIONS

Model	Capacity	Boom Length Expand	Hook Thread Length
BH2700	700 lb.	38” ~ 61”	12.5”

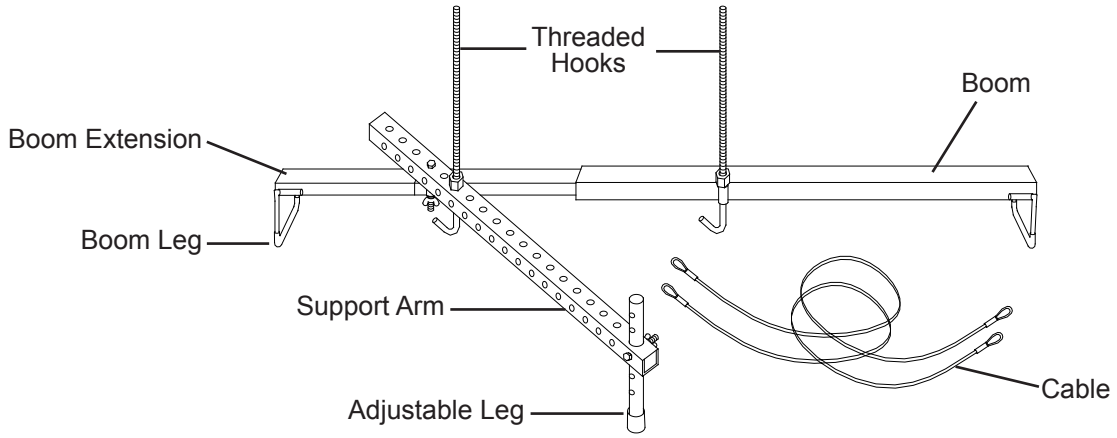

Figure 1 - Model BH2700 Components

ASSEMBLY INSTRUCTION

(refer to Figure 2)

1. Insert the wide leg (#13) into tube welded at the end of boom (#1) and the narrow leg (#14) to boom extension (#2).
2. Slide transfer adapter (#11) over the end of boom extension (#2) with tube toward you.
3. Insert the boom extension (#2) into boom (#1).

NOTE: The Engine Transverse Support Bar may be used with or without support arm, depending on the load being supported.

4. <u>To use without support arm:</u> Secure both threaded hooks (#3) to the tube welded on boom and transfer adapter with barrel hex nut (#7). Thread the hex nut (#7) all the way down towards the hook portion to hold it out of the way until needed.
5. <u>To use with support arm:</u>
   (a) Insert the adjustable leg (#6) to support arm (#10), then hand tight with M8x65 bolt and wing nut (#9 & 8). Do not fully tighten wing nut as height adjustment may be necessary once the Transverse Support Bar is placed over the engine compartment of the vehicle.
   (b) After determining the length of support arm needed, Connect the support arm (#10) to transfer adapter (#11) on the boom extension with M12x120 bolt and wing nut (#5 & 4). Again, do not fully tighten as some length adjustment may be required.
   (c) Before placing the Transverse Support Bar over the engine compartment, install the two threaded hooks (#3) provided. Insert one hook to the tube welded on boom (#1) and secure with barrel hex nut (#7). Thread the hex nut (#7) all the way down towards the hook portion to hold it out of the way until needed. Then, locate the best position on the support arm for the second hook and install in the same manner.
6. Now the Engine Transverse Support Bar is ready to use.

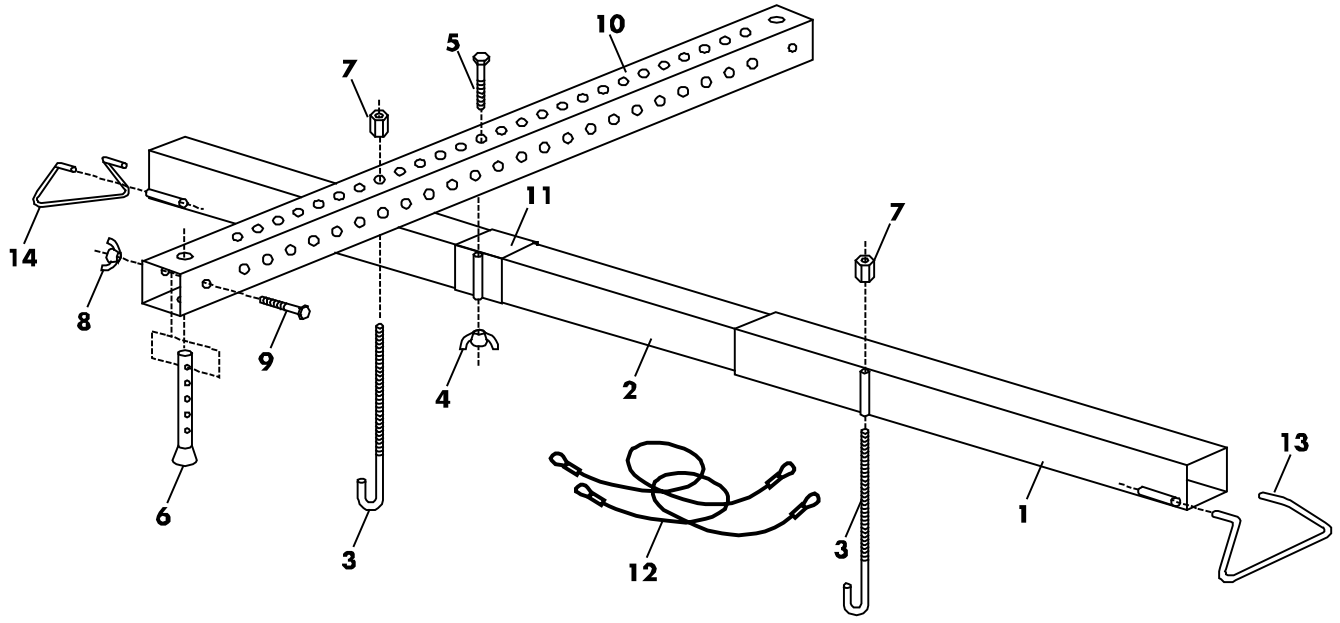

Figure 2 - Model BH2700 Assembly & Parts Illustration

⚠ WARNING

- **Study, understand, and follow** all instructions provided before use.
- **Do not** exceed rated capacity.
- **Do not** exceed maximum width.
- Never crawl under the suspended load for any reason.
- Ensure that the engine is supported securely before repairing.
- Do not use this device for any purpose other than that for which it is intended.
- Use **only** those chains, slings, accessories and adapters provided by the manufacturer.
- No alterations shall be made to this product.
- **Failure** to heed these markings may **result** in **personal injury and/or property damage.**

OPERATION

1. Determine the location of the two engine support bolts on your vehicle. Then place the transverse support bar directly over these two bolts.
2. Adjust the boom extension (#2) to ensure that both legs (#13 & 14) are sitting inside the fender of the engine compartment.

If the inside fender lips are more than 61" apart, the Engine Transverse Support Bar must not be used. Do not exceed the designated marking (61"). Over-extending could cause the Engine Transverse Support Bar to collapse, resulting in personal injury or property damage.

3. Adjust to ensure the support arm (#10) is in correct position. The rubber tip of the adjustable leg (#6) should be on a flat, reinforced surface capable of supporting the weight of engine. Tighten both wing nuts (#4 & 8) to secure the adjustable leg (#6) and support arm (#10).
4. Lower the threaded hooks (#3) to appropriate position. Ensure that the hooks are directly over the engine support bolts or brackets; therefore the engine does not swing when vehicle is disassembled.
5. Attach the looped ends of the two 1/8" braided steel cables (#12) to the engine support bolts on the engine and loop middle of braided cables over hooks. If the engine being supported is equipped with engine lift brackets, hook the hooks (#3) directly into engine lift brackets for extra protection.

Note: Use only fasteners rated Grade 5 or higher as engine support bolts.

6. Tighten the barrel hex nuts (#7) on both hooks until cables are snug or hex nuts are tight against support bar.
7. Double check that engine is properly supported before disassemble the vehicle.

MAINTENANCE

Periodically inspect the Engine Transverse Support Bar. Ensure all parts move freely. To help prevent rust, wipe clean and/or blow dry after each use. Store the Engine Transverse Support Bar in a clean, dry area.

REPLACEMENT PARTS *(page 5)*

Not all components of the jack are replacement items, but are illustrated as a convenient reference of location and position in the assembly sequence. When ordering parts, give Model number, serial number and parts description. Call or write for current pricing:
SFA Companies, 10939 N. Pomona Ave. Kansas City, MO 64153, U.S.A.
Tel: (816) 891-6390 Fax: (816) 891-6599 E-Mail: sales@blackhawk-automotive.com

Replacement Parts List for Model BH2700:

Item	Part No.	Description	Qty
1	N/A	Boom	1
2	N/A	Boom Extension	1
3	*	Threaded Hook	2
4	*	Wing Nut, M12	1
5	*	Hex Bolt M12x120	1
6	44700-6	Adjustable Leg	1
7	*	Barrel Hex Nut	2
8	*	Wing Nut, M8	1
9	*	Hex Bolt M8x65	1
10	N/A	Support Arm	1
11	N/A	Transfer Adapter	1
12	44700-12	Braided Steel Cable, 1/8"	2
13	44700-17	Leg, Boom	1
14	44700-14	Leg, Boom Extension	1
*	44700-15	Hardware Kit	1

* - Items included in Hardware Kit
N/A - Not user serviceable

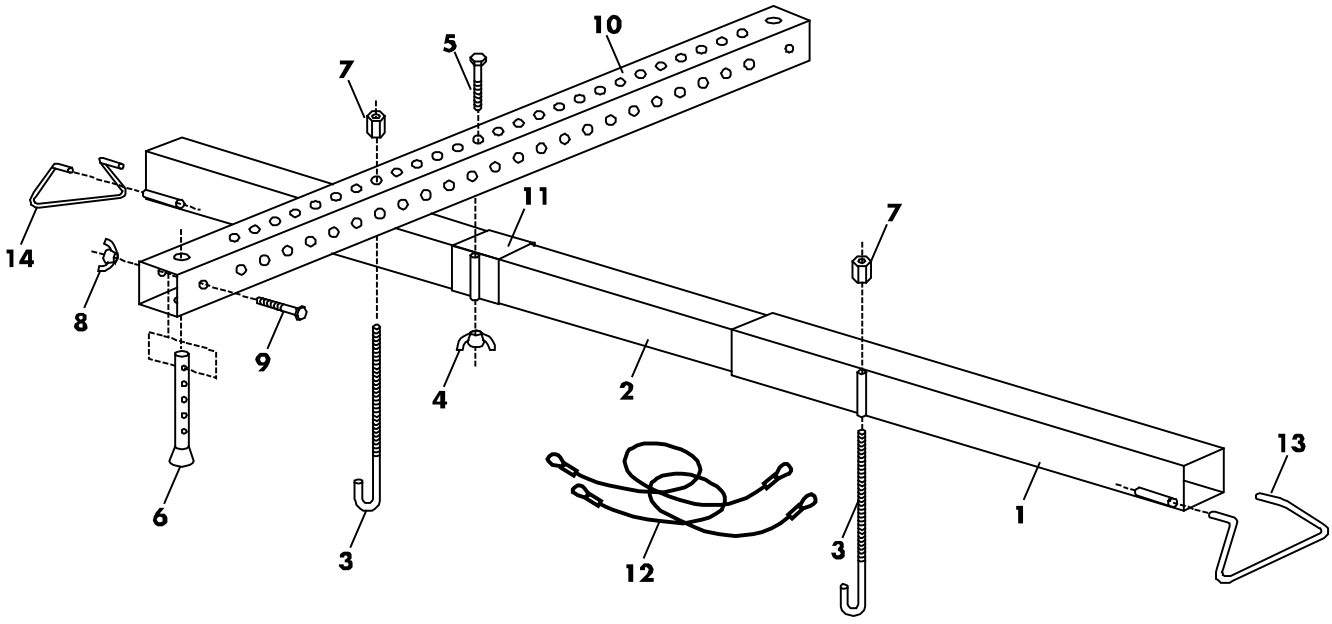

Figure 3 - Model BH2700 Parts Illustration

ONE YEAR LIMITED WARRANTY

For a period of one (1) year from date of purchase, **SFA Companies** will repair or replace, at its option, without charge, any of its products which fails due to a defect in material or workmanship under normal usage. This limited warranty is a consumer's exclusive remedy.

Performance of any obligation under this warranty may be obtained by returning the warranted product, freight prepaid, to **SFA Companies** Warranty Service Department, 10939 N. Pomona Ave., Kansas City, MO 64153.

Except where such limitations and exclusions are specifically prohibited by applicable law, (1) THE CONSUMER'S SOLE AND EXCLUSIVE REMEDY SHALL BE THE REPAIR OR REPLACEMENT OF DEFECTIVE PRODUCTS AS DESCRIBED ABOVE. (2) **SFA Companies** SHALL NOT BE LIABLE FOR ANY CONSEQUENTIAL OR INCIDENTAL DAMAGE OR LOSS WHATSOEVER. (3) ANY IMPLIED WARRANTIES, INCLUDING WITHOUT LIMITATION THE IMPLIED WARRANTIES OF MERCHANTABILITY AND FITNESS FOR A PARTICULAR PURPOSE, SHALL BE LIMITED TO ONE YEAR, OTHERWISE THE REPAIR, REPLACEMENT OR REFUND AS PROVIDED UNDER THIS EXPRESS LIMITED WARRANTY IS THE EXCLUSIVE REMEDY OF THE CONSUMER, AND IS PROVIDED IN LIEU OF ALL OTHER WARRANTIES, EXPRESS OR IMPLIED. (4) ANY MODIFICATION, ALTERATION, ABUSE, UNAUTHORIZED SERVICE OR ORNAMENTAL DESIGN VOIDS THIS WARRANTY AND IS NOT COVERED BY THIS WARRANTY.

Some states do not allow limitations on how long an implied warranty lasts, so the above limitation may not apply to you. Some states do not allow the exclusion or limitation of incidental or consequential damages, so the above limitation or exclusion may not apply to you. This warranty gives you specific legal rights, and you may also have other rights, which vary from state to state.

Notes

SFA Companies
10939 N. Pomona Ave. Kansas City, MO 64153
816-891-6390
sales@blackhawk-automotive.com

Notes

SFA Companies
10939 N. Pomona Ave. Kansas City, MO 64153
816-891-6390
sales@blackhawk-automotive.com