Hydraulic Floor Jack

Operating Instructions & Parts Manual

Model Number	Capacity
F-2332A	2 Ton
F-2392A	2 Ton
F-388P	2 1/4 Ton

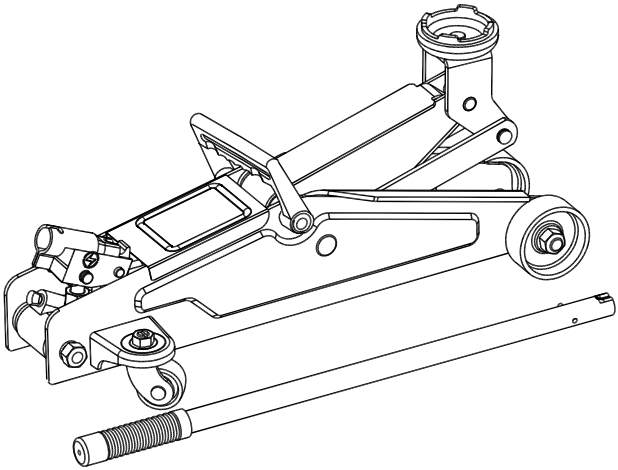

This is the safety alert symbol. It is used to alert you to potential personal injury hazards. Obey all safety messages that follow this symbol to avoid possible injury or death.

Manufactured by
MVP (H.K.) Industries Ltd.
Unit 1101 Lippo Sun Plaza,
28 Canton Road, Tsimshatsui,
Kowloon, Hong Kong

Printed in China
F-2392A-M0 issue 09/07

PACKAGE CONTENTS

Part	Description	Quantity
A	Jack	1
B	Pumping Handle	1
C	Carrying Handle	1

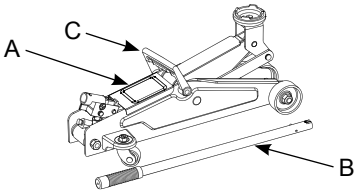

Figure 1 - Package Contents

SAFETY AND GENERAL INFORMATION

Save these instructions. For your safety, read, understand, and follow the information provided with and on this jack before using. The owner and/or operator of this jack shall have an understanding of the jack and safe operating procedures before attempting to use. The owner and/or operator shall be aware that the use and repair of this product may require special skills and knowledge. Instructions and safety information shall be conveyed in the operator's native language before use of this jack is authorized. If any doubt exists as to the safe and proper use of this jack, remove from service immediately.

Inspect before each use. Do not use if broken, bent, cracked, or damaged parts (including labels) are noted. Any jack that appears damaged in any way, operates abnormally or is missing parts, shall be removed from service immediately. If you suspect that the jack was subjected to a shock load (a load dropped suddenly, unexpectedly upon it), immediately discontinue use until the jack has been checked by a factory authorized service center (contact distributor or manufacturer for list of Authorized Service Centers). It is recommended that an annual inspection be done by qualified personnel. Labels and owner's manuals are available from manufacturer (see page 7).

PRODUCT DESCRIPTION

Hydraulic Floor Jack is designed to lift, but not support, one end of a vehicle. This Jack must be used in conjunction with a pair of appropriately rated jack stands.

***NEVER** use a hydraulic jack as a stand-alone device. After lifting, immediately support the lifted vehicle with a pair of appropriately rated jack stands.*

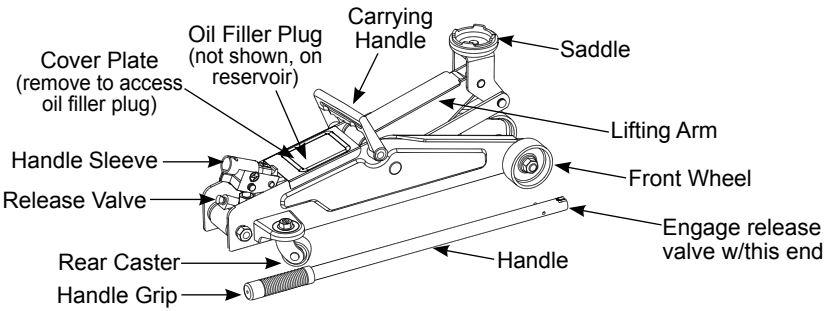

Figure 2 - Typical Floor Jack Nomenclature

⚠ WARNING

- **Study, understand, and follow** all instructions provided with and on this device **before use**.
- **Do not** exceed rated capacity.
- Use only on hard, level surface.
- **This is a lifting device only!**
- **Immediately** after lifting, support the vehicle with a pair of appropriately rated jack stands.
- **Never** work on, under, or around a load supported only by this device.
- Do not move or dolly the vehicle while on the jack.
- No alterations shall be made to this device.
- Lift only on areas of the vehicle as specified by the vehicle manufacturer.
- Failure to heed these markings may result in personal injury and/or property damage.

⚠ WARNING

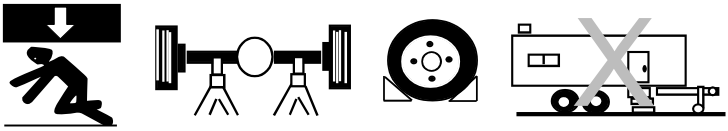

To avoid crushing and related injuries:

- **Never** work on, under, or around a load supported only by a hydraulic jack.
- **Read**, understand and follow all printed materials provided with and on this jack.
- **Immediately** support the lifted vehicle with a pair of appropriately rated jack stands.
- **Use ONLY** on vehicles whose lift points are compatible with the saddle of this jack. Incompatibility may result in structural damage to the vehicle and/or jack.
- **Chock** each unlifted tire in both directions.
- **Be alert** and **sober** when using this product! **Never** operate this equipment when under the influence of drugs or alcohol.
- **DO NOT** use this device to lift, level, lower, support, adjust or otherwise move a house, mobile home, travel trailer, camper, or building structure of **any** type, size, or configuration.

PREPARATION

Before Use

1. Verify that the product and the application are compatible, if any doubt call Customer Support @ (816) 891-6390.
2. Before using this product, read the owner's manual completely and familiarize yourself thoroughly with the product, its components and recognize the hazards associated with its use.
3. To familiarize yourself with basic operation, use the stamped end of the provided handle to engage and turn the release valve:
   a. Clockwise until firm resistance is felt to further thread engagement. This is the '**CLOSED**' release valve position used to **raise** the load.
   b. Counter-clockwise, but no more than 1/2 full turn from the closed position. This is the '**OPEN**' release valve position used to **lower** the load.
4. With saddle fully lowered, locate and remove the cover plate, then remove the oil filler plug. Insert the handle into the handle sleeve; then pump 6 to 8 full strokes. This will help release any pressurized air which may be trapped within the reservoir. Check oil level. Proper oil level will vary from just covering the ram cylinder to 3/16" above it as seen from the oil filler plug hole. Reinstall the oil filler plug.
5. Check to ensure that jack rolls freely (if so equipped) and that the pump operates smoothly before putting into service. Replace worn or damaged parts and assemblies with factory Authorized Replacement Parts only. Contact the manufacturer or distributor of this product for a list of factory authorized service centers (see page 7, Replacement Parts List). Lubricate as instructed in Maintenance Section.

Bleeding / Venting Trapped Air

With the release valve in the OPEN position (3b above) and with saddle fully lowered, locate and remove the oil filler plug. Insert the handle into the handle sleeve; then pump 6 to 8 full strokes. This will help release any pressurized air which may be trapped within the reservoir. Oil level should be even with the bottom of the oil filler plug hole. Reinstall the oil filler plug.

OPERATING INSTRUCTIONS

This is the safety alert symbol. It is used to alert you to potential personal injury hazards. Obey all safety messages that follow this symbol to avoid possible injury or death.

Lifting

1. Place vehicle in park, with emergency brake on and wheels securely chocked to prevent inadvertent vehicle movement.
2. Locate and close release valve by turning handle clockwise until firm resistance is felt to further thread engagement. Center jack saddle under lift point.
3. Insert handle into handle sleeve and pump to contact lift point. Verify the lift point, then pump the handle until load reaches desired height.
4. Transfer the load **immediately** to a pair of appropriately rated jack stands.

*Use **only** the handle assembly provided by the jack manufacturer. The handle assembly provided with this jack will safely engage the release valve and operate the handle sleeve. If the handle is worn, operates abnormally, or will not positively engage the release valve, **STOP**, discontinue use of the jack until a factory replacement handle assembly can be acquired.*

OPERATING INSTRUCTIONS (continued)

Lowering

1. Raise load high enough to clear the jack stands; then carefully remove jack stands (always used in pairs).
2. Slowly turn the handle counter-clockwise, but no more than 1/2 full turn. If the load fails to lower:
   a. Use another jack to raise the vehicle high enough to reinstall jack stands.
   b. Remove the affected jack and then the stands.
   c. Using the other jack, lower the load by turning the operating handle counter-clockwise, but no more than 1/2 full turn.
3. After removing jack from under the load, push saddle down to reduce ram exposure to rust and contamination.

CARE AND MAINTENANCE

Maintenance

Important: Use only a good grade hydraulic jack oil. **NEVER** use brake fluid, turbine oil, transmission fluid, motor oil or glycerin. Improper fluid can cause failure of the jack and the potential for sudden and immediate loss of load. We recommend Mobil DTE13M or equivalent.

Adding oil

1. With saddle fully lowered set jack in its upright, level position. Locate and remove oil filler plug.
2. Proper oil level will vary from just covering the inner cylinder to ~3/16" above the inner cylinder as seen from the oil filler plug hole. If the oil level is too low, the jack will not raise to its advertised maximum height. Reinstall the oil filler plug.

NOTICE: ***DO NOT*** *overfill the reservoir. An overfilled reservoir can cause a wide variety of performance problems and create an oily mess on the shop floor! See the troubleshooting guide, page 6.*

Changing oil

For best performance and longest life, replace the complete fluid supply at least once per year.

1. With saddle fully lowered, remove the oil filler plug.
2. Lay the jack on its side and drain the fluid into a suitable container.

   Note: Dispose of hydraulic fluid in accordance with local regulations.
3. Fill with oil. Proper oil level will vary from just covering the inner cylinder to ~3/16" above the inner cylinder as seen from the oil filler plug hole. Reinstall the oil filler plug.

Lubrication

A periodic coating of light lubricating oil to pivot points, axles and hinges will help to prevent rust and assure that wheels, casters and pump assemblies move freely.

Cleaning

Periodically check the pump piston and ram for signs of rust or corrosion. Clean as needed and wipe with an oily cloth.

Note: Never use sandpaper or abrasive material on these surfaces!

Storage

Store the jack with the pump piston, ram plunger, and saddle fully lowered and the release valve open, but never more than 1/2 turn. This will help prevent rust and corrosion to those critical surfaces.

TROUBLESHOOTING

Symptom	Possible Causes	Corrective Action
Jack will not lift load	• Release valve not tightly closed. • Load is too heavy.	• Ensure release valve tightly closed. Use the provided handle to engage the release valve. Turn the release valve clockwise until firm resistance is felt. • Consider higher capacity jack.
Jack *bleeds off after lift * 'bleeds off' means the load slowly and unintentionally lowers after lifting	• Hydraulic unit malfunction.	• **Discontinue use**, contact Customer Support.
While lowering, fluid leaks from reservoir area. Jack saddle will not descend to lowest advertised height	• Reservoir overfilled. • Ram plunger/cylinder deformed, seized up in ram cylinder and/ or top nut, likely the result of off-center loading.	• Drain fluid to proper level. • Contact Customer Support.
Ram plunger will not remain lowered after released from contact with load (creeps back up)	• Air trapped in system.	• **IF** there is no longer contact between the lifted load and the jack saddle, simply remove the jack and follow the instructions on page 4 for bleeding air from system. However, **IF** there is any loaded contact between the saddle and the vehicle, ***STOP***, use another jack to raise the load high enough to re-install jack stands. Remove the affected jack, then the stands. Using the other jack, lower the load by turning the release valve counter-clockwise, but ***never more than 1/2 full turn***, then follow the instructions on page 4 for bleeding air from system.
Poor lift performance	• Fluid level low. • Air trapped in system. • Hydraulic unit malfunction.	• Ensure proper fluid level. • With ram fully retracted, follow the instructions for bleeding air on page 4. • Contact Customer Support.
Will not lift to full extension	• Fluid level low.	• Ensure proper fluid level.

REPLACEMENT PARTS

Not all components of the jack are replacement items, but are illustrated as a convenient reference of location and position in the assembly sequence. When ordering parts, give model number, serial number and description below. Call or write for current pricing: Customer Support, 10939 N. Pomona Ave., Kansas City, MO 64153.
Phone (816) 891-6390, Fax (816) 891-6599

Model F-2332A, F-2392A & F-388P

Item	Description	Quantity
1	Power Unit	1
2	Front Wheel Assembly	2
3	Rear Caster Assembly	2
4	Saddle	1
5	Oil Filler Plug	1
6	Return Spring	1
7	Handle	1
8	Spring Clips	5
--	Labels	2
--	Owner's Manual	1

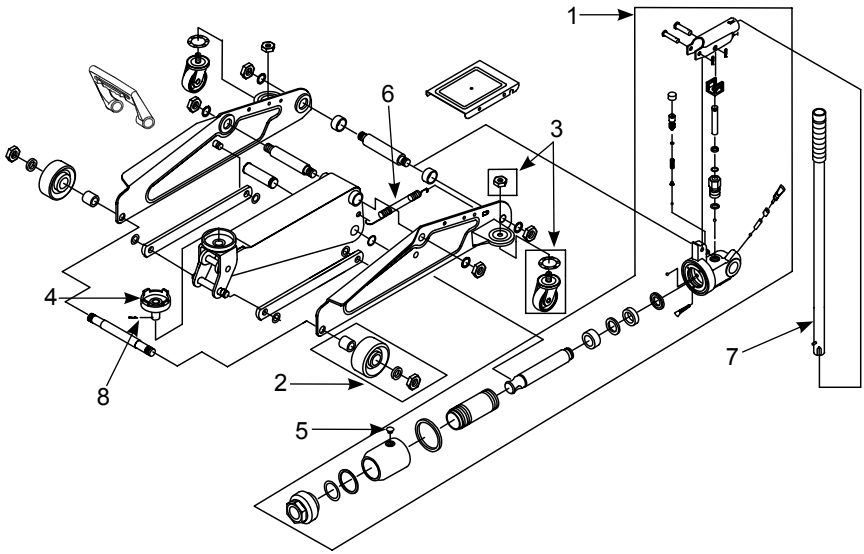

Figure 3 - Replacement Parts Illustration

WARRANTY

2 YEARS LIMITED WARRANTY

For a period of 2 years from the date of purchase, **MVP (H.K.) Industries Ltd.** will repair or replace, without charge, any of its products which fails due to a defect in material or workmanship. Performance of any obligation under this warranty may be obtained by simply returning the product during the warranty period to your retailer with the original receipt along with an explanation of the defect. This warranty does not cover damage or failure resulting from misuse, abuse or modification of the product. **MVP** MAKES NO OTHER WARRANTIES, EITHER EXPRESS OR IMPLIED, INCLUDING WITHOUT LIMITATION THE IMPLIED WARRANTIES OF MERCHANTABILITY AND FITNESS FOR A PARTICULAR PURPOSE. IN ADDITION, THIS WARRANTY DOES NOT COVER INCIDENTAL OR CONSEQUENTIAL DAMAGES SUCH AS PHYSICAL INJURIES OR PROPERTY DAMAGE, LOSS OF TIME, LOSS OF USE OF VEHICLE, ETC. This warranty gives you specific legal rights, and you may also have other rights which vary from state to state. Some states do not allow limitations on how long an implied warranty lasts, so the above limitation may not apply to you. Some states do not allow the exclusion or limitation of incidental or consequential damages, so the above limitation or exclusion may not apply to you.