SPECIFICATIONS

Power Output: 12V DC 15A
Maximum PSI: 250 PSI blocked head pressure
Duty Cycle: (minutes) 15/30 (ON/OFF)
Maximum Amperage Draw: 12 amps @ 13.5 V DC
Maximum Air Flow: 0.7 CFM
Hose Length: 30”
Built-in Battery: 7AH Sealed Lead-acid battery (dispose of properly)
AC Adapter: 120V/15A AC/DC adapter
Fuse: 15A

Contains Sealed Lead Acid Battery. Battery must be recycled. Lead is known to cause birth defects and reproductive harm. Wash hands thoroughly after handling battery. Keep this product out of the reach of children.

90 DAYS LIMITED WARRANTY

For a period of ninety (90) days from date of purchase, **Shinn Fu Co. of America, Inc.** will repair or replace, at its option, without charge, any of its products which fails due to a defect in material or workmanship, or which fails to conform to any implied warranty not excluded hereby.

Performance of any obligation under this warranty may be obtained by returning the warranted product, freight prepaid, to **Shinn Fu Co. of America, Inc.** Warranty Service Department, 10939 N. Pomona Ave., Kansas City, MO 64153.

Except where such limitations and exclusions are specifically prohibited by applicable law, (1) the CONSUMER'S SOLE AND EXCLUSIVE REMEDY SHALL BE THE REPAIR OR REPLACEMENT OF DEFECTIVE PRODUCTS AS DESCRIBED ABOVE, and (2) **Shinn Fu Co. of America, Inc.** SHALL NOT BE LIABLE FOR ANY CONSEQUENTIAL OR INCIDENTAL DAMAGE OR LOSS WHATSOEVER, and (3) THE DURATION OF ANY AND ALL EXPRESSED AND IMPLIED WARRANTIES, INCLUDING WITHOUT LIMITATION, ANY WARRANTIES OF MERCHANTABILITY AND FITNESS FOR A PARTICULAR PURPOSE, IS LIMITED TO A PERIOD OF NINETY (90) DAYS FROM DATE OF PURCHASE.

Some states do not allow limitations on how long an implied warranty lasts, so the above limitation may not apply to you. Some states do not allow the exclusion or limitation of incidental or consequential damages, so the above limitation or exclusion may not apply to you. This warranty gives you specific legal rights, and you may also have other rights which vary from state to state.

TAILGATE TOOLS

Cordless Air Compressor

Owner’s Manual

Model Number	Rated Capacity
W-2100	250 psi
W-2200	250 psi

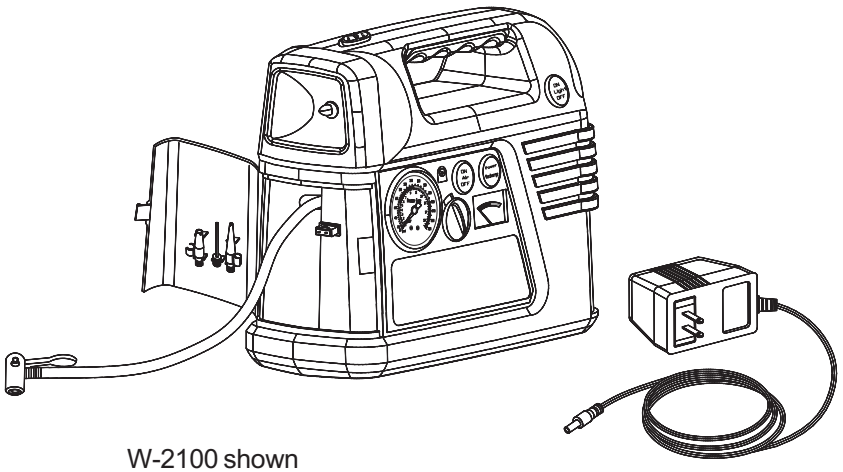

W-2100 shown

Shinn Fu Company of America, Inc. ©2003
10939 N. Pomona Ave.
Kansas City, MO 64153
Phone (816)891-6390, fax (816)891-6599

Printed in China
OIPM#CAC-03

Save these instructions for future use. Read, understand and follow the instructions provided with and on this device. The owner and operator of this compressor shall have an understanding of the product and safe operating procedures before attempting to use. If any doubt exists as to the safe and proper use of this compressor, remove from service immediately. Instructions and safety materials shall be conveyed in the operators native language before use of this product is authorized. **Inspect before each use**. Do not use if bent, broken, melted, burnt or otherwise damaged components are noted. A compressor that is damaged in any way or operates abnormally shall be removed from service immediately. This unit is designed for intermittent use only. Operation beyond its duty cycle may result in compressor and/or vehicle damage. **NEVER** exceed rated pressure of the item being inflated. If rated pressure is exceeded, the item being inflated may burst.

PRODUCT DESCRIPTION

Tailgate Tools Cordless Air Compressors are installed with a built-in 12V lead acid battery to provide a power source to the compressor and the DC 12V power supply. Its intended use is to inflate automotive and light truck tires to manufacturers recommended pressures, and to inflate low pressure inflatables such as rafts, cushions, and sports balls. Refer to vehicle owner's manual or inflatable product operator's manual for proper inflation procedure.

⚠WARNING

Read, understand and follow all printed materials provided with and on this device. Do not exceed rated pressure of the item being inflated! Never attempt to start the car engine when the unit is connected to the lighter socket of the car. Do not leave device operating and unattended. Keep out of the reach of children. Failure to heed this marking may result in personal injury and/or property damage.

! SAFETY MESSAGE !

Do not operate this device near flammable materials. This device contains a DC motor and components which may arc during normal operation. This arcing may ignite flammable gases. No alterations shall be made to this device. Only attachments and/or adapters supplied by the manufacturer shall be used. Never operate this device using a battery charger. If vehicle fuse is blown, ONLY replace with fuse of identical rating.

⚠ATENCIÓN

- Leer, comprender, y seguir las instrucciónes antes de utilizar el aparato.
- El manual de instrucciónes y la información de seguridad deben estar comunicado en lengua del operador antes del uso.
- No seguir estas indicaciónes puede causar daños personales o materiales.

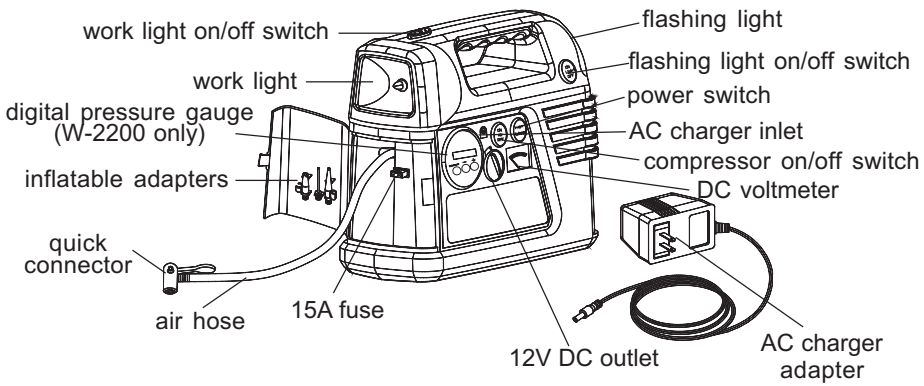

SAFETY PRECAUTIONS

A. Care and maintenance of battery

1. The battery of this compressor is not fully charged at the time of purchase. Before initial use, it must be charged for 15 hours using the AC charger enclosed.
2. Recharge the battery every 3 to 6 months if the battery has not been used. If the battery is totally drained and without proper recharging; the battery may not be rechargeable.
3. Recharge when DC voltmeter reads anywhere in the "recharge" area.

B. 120V AC charger adapter

1. Use only the charging adapter enclosed.
2. Do not operate the unit when charging with the charging adapter.

C. Air Compressor

1. Check the battery voltage via the voltmeter on the front panel before use. If the voltage drops below the green portion, recharge the unit before use.
2. Do not continue to operate the compressor when the voltage drops below the green portion on the voltmeter.
3. Do not let the air compressor overheat. Let the air compressor cool for 30 minutes after every 15 minutes of operation.
4. Only replace a fuse with one of the same amperage, 15 A in this case.
5. Never operate or store the unit near fire, flammable gas or liquid.

OPERATING INSTRUCTIONS (see page 2 illustration)

1. Turn on the unit by pushing the power switch to 'Power'.
2. Check the voltage of the battery on the voltmeter every time you use this unit.
3. If the voltage pointer points below the 'good' condition, recharge the battery according to the following steps:

AC 120V recharging (see page 2 illustration)

1. Push the power switch to "Recharge".
2. Insert the power jack of the 120V AC charger adapter into the AC charger inlet.
3. Plug the charger adapter into a 120V AC electrical outlet to start charging.
4. Push the power switch to 'Power' to check the voltage level of the battery, if necessary, push the switch back to 'Recharge' to resume the charging process.
5. Charge the unit for about 15 hour before initial use and for normal recharge.

Note: The unit must be charged before initial use.

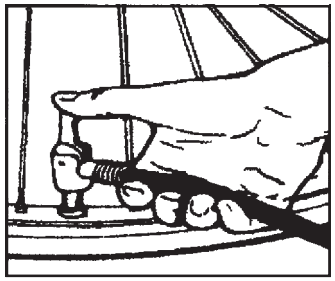

Fig. 1

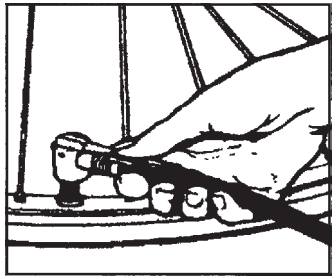

Fig. 2

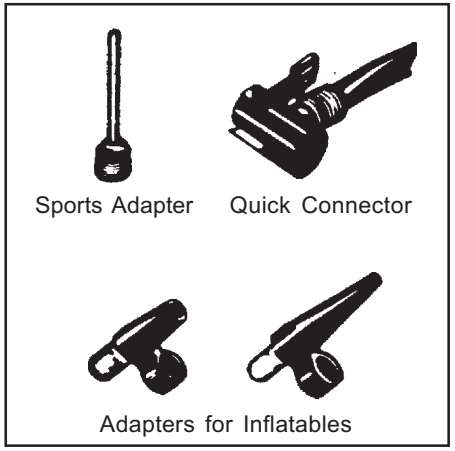

Fig. 3

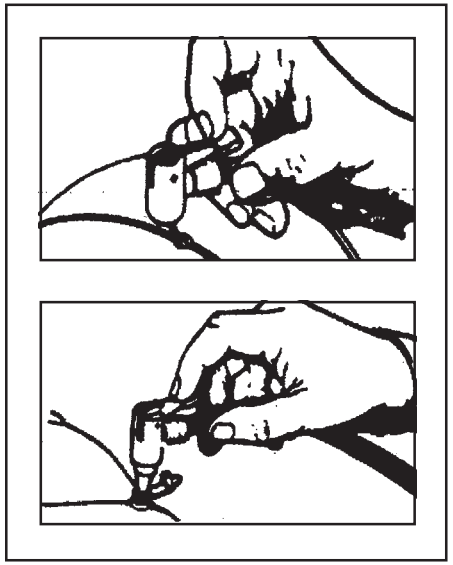

Fig. 4

A. Operation of Air Compressor

a. For use with high pressure inflatables

For Model W-2100:

1. With thumb latch Quick Connector open, place securely onto the tire valve stem (Fig. 1).
2. Use thumb to close Quick Connector, ensuring that the thumb latch is as far down as possible (Fig. 2).
3. Toggle power switch to “POWER” position.
4. Toggle compressor ON/OFF switch to “ON” position. Unit should begin inflating.
5. Inflate until object nears it’s original shape, use compressor’s gauge as a reference to desired pressure.
6. When near correct operating pressure, toggle compressor ON/OFF switch to “OFF”, disconnect the thumb latch actuated Quick Connector.
7. Using tire gauge, check pressure and if needed adjust to desired pressure as determined by the vehicle and/or tire manufacturer.

For model W-2200:

1. With thumb latch Quick Connector open, place securely onto the tire valve stem (Fig. 1).
2. Use thumb to close Quick Connector, ensuring that the thumb latch is as far down as possible (Fig. 2).
3. Turn the power switch to “Power”. In the digital gauge, press the reset button to move from Bar to PSI as needed. Press “+” or “–” to choose the desired pressure.
4. Toggle the compressor ON/OFF switch to “ON” position. Unit should begin inflating and will stop near the desired pressure. Unit has electronic memory of previous pressure setting and will inflate next item to the same pressure until reset the value by “+” or “–” button.
5. When desired pressure is reached, toggle compressor ON/OFF switch to “OFF” position and the power switch to “Recharge” to turn off the power.
6. Using tire gauge, check pressure and if needed adjust to desired pressure as determined by the vehicle and/or tire manufacturer.
7. Move to next item being inflated and repeat step 3 or if done, remove and store the air hose in the storage compartment provided.

b. For use with low pressure inflatables (Apply to model W-2100 and W-2200)

1. To inflate air mattresses, beach balls, life jackets etc., select the suitable adapter (Fig.3), then insert and secure into the Quick Connector (see Fig 4).
2. Insert the connected adapter into the appropriate receiver on the inflatable (see Fig.4).
3. Toggle compressor ON/OFF switch to ON position. Unit should begin inflating.
4. Inflate to a pressure or level of firmness that is specifically recommended by the manufacturer, then toggle compressor ON/OFF switch to OFF. Check for desired firmness or pressure and adjust as needed.
5. Remove Quick Connector from the inflatable.
6. Remove the adapter from the Quick Connector.
7. Check for proper firmness and adjust as needed.

B. Operation of Work/Flashing Light

1. The unit is provided with an individual work light and an individual flashing light which can be operated simultaneously.
2. Turn power switch to “Power” before any operation. Then turn the light ON/OFF switch to the “ON” position for the operation of each light.

C. Operation of Power Supply

1. This unit provides a 12V DC output which can be used to drive 12V DC products rated or less than 15A.
2. Turn the power switch to “Power” and insert the cigarette plug of product into the 12V DC cigarette socket of this unit to obtain the power required.

Warning: Do not exceed the maximum load of 15A

Tips of Operation

1. Do not overheat the compressor, pay close attention to cycle times (the compressors time on and off). Never exceed 15 minutes continuous running. Let unit cool for 30 minutes, then try again.
2. Operate and store in a clean, dry environment. Do not obstruct the units vented surface openings.
3. This unit is protected by a built-in 15A fuse. Replacement shall be made with a fuse with the same rating.

Fuse Replacement Procedure

1. Make sure that the power switch is turned “Off” by toggling to “Recharge” and the 12V DC output socket is disconnected from any load.
2. Open the front compartment door.
3. Pull out the blown fuse and replace with a new one.

Performance Tip

Keep tires inflated per your vehicles owners manual. This will increase gas mileage and reduce tire wear.