25/55/100 TON SHOP PRESSES

- Heavy steel welded construction
- Multi-position bed for work height adjustment
- Ideal for the removal or installation of gears, universal joints, pulleys, wrist pins, and other press jobs
- Excellent for bending, bonding, or straightening applications

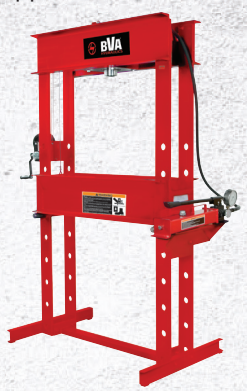

Capacity (Tons)	Model Number	Pump Type	Pump Model	Cylinder Model	Cylinder Stroke (In)	Bed Positions	Press Dimensions (H X L X W)	Working Space (Min - Max) (in)
Single Acting								
25	IMP2506	Manual	P1000	H2506	6	8	71” X 48” X 28”	4.5” X 47.25”
	IAP2506	Air	PA1500	H2506	6	8	71” X 48” X 28”	4.5” X 47.25”
	IEP2506	Electric	PEW0501T	H2506	6	8	71” X 48” X 28”	4.5” X 47.25”
	IMP2514	Manual	P2001	H2514	14	8	71” X 48” X 28”	4.5” X 47.25”
	IAP2514	Air	PA2000	H2514	14	8	71” X 48” X 28”	4.5” X 47.25”
	IEP2514	Electric	PEW0501T	H2514	14	8	71” X 48” X 28”	4.5” X 47.25”
	IEPS2514	Electric/Solenoid	PESL0501T	H2514	14	8	71” X 48” X 28”	4.5” X 47.25”
55	IMP5506	Manual	P2301	H5506	6	9	79” X 56” X 30”	14” X 55.5”
	IAP5506	Air	PA1500	H5506	6	9	79” X 56” X 30”	14” X 55.5”
	IEP5506	Electric	PEW0501T	H5506	6	9	79” X 56” X 30”	14” X 55.5”
	IAP5513	Air	PA3801	H5513	13	9	79” X 56” X 30”	14” X 55.5”
	IEP5513	Electric	PEW0501T	H5513	13	9	79” X 56” X 30”	14” X 55.5”
100	IMP10010	Manual	P8701	H10010	10	8	89” X 63” X 30”	11.25” X 51”
	IAP10010	Air	PA7550	H10010	10	8	89” X 63” X 30”	11.25” X 51”
	IEP10010	Electric	PEW1002T	H10010	10	8	89” X 63” X 30”	11.25” X 51”
	IEPS10010	Electric/Solenoid	PESL1002T	H10010	10	8	89” X 63” X 30”	11.25” X 51”
Double Acting								
25	IMPD2506	Manual	P2301M	HD2506	6	6	71” X 48” X 28”	4.5” X 47.25”
	IAPD2506	Air	PA3801M	HD2506	6	6	71” X 48” X 28”	4.5” X 47.25”
	IEPD2506	Electric	PEWM0501T	HD2506	6	6	71” X 48” X 28”	4.5” X 47.25”
	IEPDS2506	Electric/Solenoid	PESML0501T	HD2506	6	6	71” X 48” X 28”	4.5” X 47.25”
55	IEPD5513	Electric	PEWM1002T	HD5513	13	9	79” X 56” X 30”	14” X 55.5”
100	IEPD10010	Electric	PEWM1002T	HD10010	10	8	89” X 63” X 30”	11.25” X 51”
	IEPDS10010	Electric/Solenoid	PESML1002T	HD10010	10	8	89” X 63” X 30”	11.25” X 51”

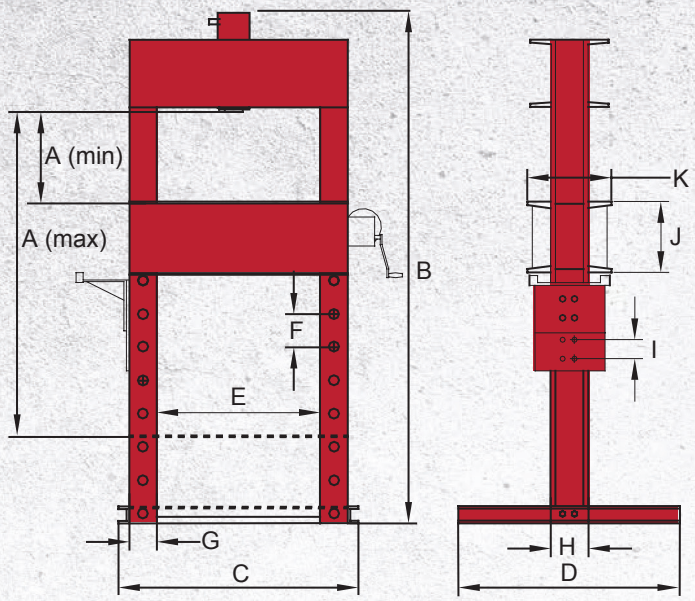

Model Number	Dimensions (in)												Weight (lbs)
	A (Min.)	A (Max.)	B	C	D	E	F	G	H	I	J	K	
Single Acting													
IMP2506	4.5	47.25	71	48	28	30	6	3	6.5	3	6	11.5	560
IAP2506	4.5	47.25	71	48	28	30	6	3	6.5	3	6	11.5	560
IEP2506	4.5	47.25	71	48	28	30	6	3	6.5	3	6	11.5	560
IMP2514	4.5	47.25	71	48	28	30	6	3	6.5	3	6	11.5	560
IAP2514	4.5	47.25	71	48	28	30	6	3	6.5	3	6	11.5	560
IEP2514	4.5	47.25	71	48	28	30	6	3	6.5	3	6	11.5	560
IEPS2514	4.5	47.25	71	48	28	30	6	3	6.5	3	6	11.5	560
IMP5506	14.0	55.5	79	56	30	35.4	6	4	9	3	10	14.8	760
IAP5506	14.0	55.5	79	56	30	35.4	6	4	9	3	10	14.8	760
IEP5506	14.0	55.5	79	56	30	35.4	6	4	9	3	10	14.8	760
IAP5513	14.0	55.5	79	56	30	35.4	6	4	9	3	10	14.8	760
IEP5513	14.0	55.5	79	56	30	35.4	6	4	9	3	10	14.8	760
IMP10010	14.0	55.5	79	56	30	35.4	6	4	9	3	10	14.8	770
IAP10010	11.3	51.0	89	63	30	35.5	8	-	10	-	12	16.0	1,550
IEP10010	14.0	55.5	79	56	30	35.4	6	4	9	3	10	14.8	770
IEPS10010	11.3	51.0	89	63	30	35.5	8	-	10	-	12	16.0	1,550
Double Acting													
IMPD2506	4.5	47.25	71	48	28	30	6	3	6.5	3	6	11.5	560
IAPD2506	4.5	47.25	71	48	28	30	6	3	6.5	3	6	11.5	560
IEPD2506	4.5	47.25	71	48	28	30	6	3	6.5	3	6	11.5	560
IEPDS2506	4.5	47.25	71	48	28	30	6	3	6.5	3	6	11.5	560
IEPD5513	4.5	47.25	71	48	28	30	6	3	6.5	3	6	11.5	560
IEPD10010	14.0	55.5	79	56	30	35.4	6	4	9	3	10	14.8	770
IEPDS10010	11.3	51.0	89	63	30	35.5	8	-	10	-	12	16.0	1,550

55 TON SHOP PRESS WITH MOVABLE WORK HEAD

- Heavy steel welded construction
- Cylinder moves from side to side and locks into position
- Multi-position bed for work height adjustment
- Pump, cylinder, hose and fittings are included

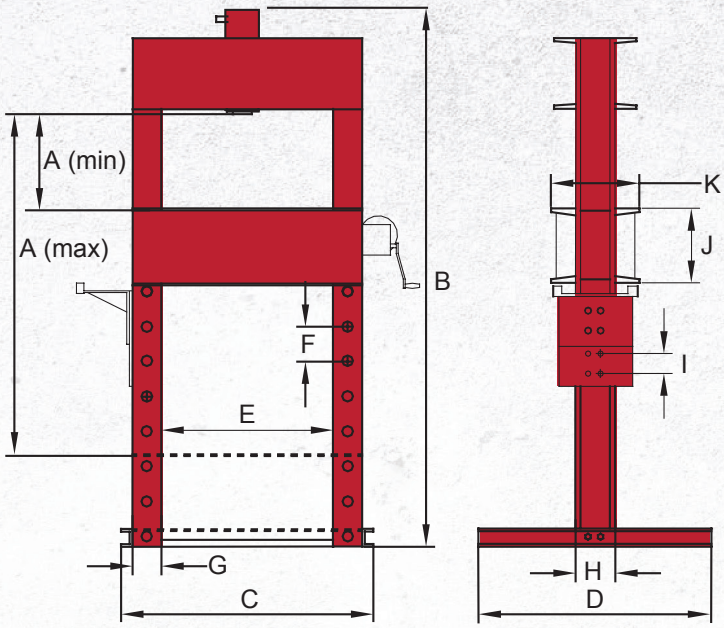

Capacity (Tons)	Model Number	Pump Type	Pump Model	Cylinder Model	Cylinder Stroke (In)	Bed Positions	Press Dimensions (H X L X W)	Working Space (Min - Max) (in)
Single Acting								
55	IMPR5506	Manual	P2001	H5506	6	7	78" X 46.5" X 30"	15.38" X 51.38"
	IAPR5506	Air	PA2000	H5506	6	7	78" X 46.5" X 30"	15.38" X 51.38"
	IEPR5506	Electric	PEW0501T	H5506	6	7	78" X 46.5" X 30"	15.38" X 51.38"
	IAPR5513	Air	PA2000	H5513	13	7	85" X 46.5" X 30"	15.38" X 51.38"
	IEPR5513	Electric	PEW0501T	H5513	13	7	85" X 46.5" X 30"	15.38" X 51.38"
	IEPRS5513	Electric/Solenoid	PESL0501T	H5513	13	7	85" X 46.5" X 30"	15.38" X 51.38"
Double Acting								
55	IAPDR5506	Air	PA3801M	HD5506	6	7	78" X 46.5" X 30"	15.38" X 51.38"
	IEPDR5513	Electric	PEWM1002T	HD5513	13	7	85" X 46.5" X 30"	15.38" X 51.38"
	IEPDRS5513	Electric/Solenoid	PESML1002T	HD5513	13	7	85" X 46.5" X 30"	15.38" X 51.38"